Attaching the Wall Mounting Bracket of TSP600

1. Unpacking : Confirm that all accessories are included.

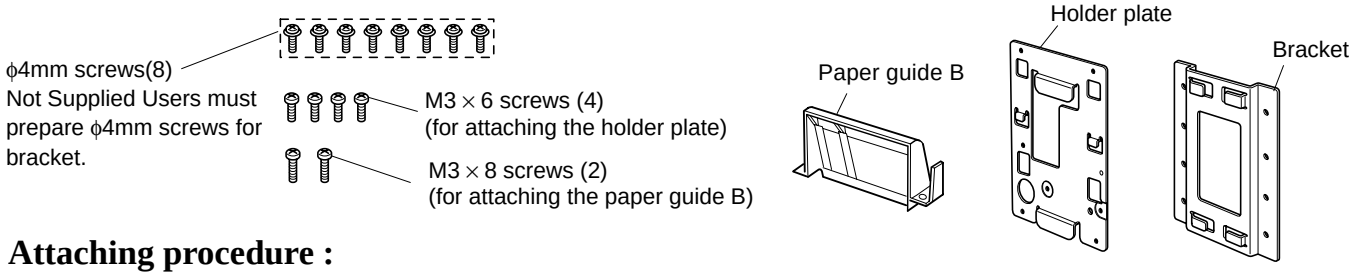

2. Attaching procedure :

Precautions when mounting

✓ Ensure that power that is supplied to the printer and that all devices connected to the printer have been switched OFF and that the cables have been unplugged before starting the modification. If the AC adapter is connected to the printer, unplug it from the main socket.

✓ Select a location where the unit will not be exposed to moisture or physical shocks. Make sure that the wall is wide enough to mount the brackets.

✓ Carefully select screws for mounting the bracket to the wall. These screws must be strong enough to hold the printer and must be long enough to completely enter the wall to provide a secure mounting. Remember that Star accepts no responsibility for damage resulting from the printer falling due to improper mounting.

✓ The weight of the printer, including a roll of paper with the largest diameter, is approximately 1.9 kg.

✓ The screws for mounting the bracket must have both a shear and tensile strength capable of withstanding a load of 12 kgf (118 N) or more. It is recommended that anchor nuts be used.

✓ A screw diameter of 4 mm is recommended.

✓ Always use all eight (8) screw holes in the mounting bracket when securing the mounting bracket to the wall.

✓ Mount the bracket to the wall so that its mounting accuracy is within a range of ±2° to the vertical direction.

✓ The wall used for mounting should be 90°±2° in reference to the horizontal direction.

2-1. Specifications of the wall mounting bracket

Main unit outer dimensions	121 × 168 × 14.5 mm (Width × Height × Depth)		
Main unit weight	Approx. 0.27 kg.		
Screws for wall mounting bracket	Wood structure wall	The eight (8) screws used must have both a shear and tensile strength capable of withstanding a load of 12 kgf (118 N) or more	Use commercially available screws that have sufficient strength to withstand the weight of the main unit.
	Concrete wall	The anchor nuts used must have both a shear and tensile strength capable of withstanding a load of 12 kgf (118 N) or more	

2-2. Mounting the bracket for the wall mount model

① Make sure there is enough room for the printer, particularly in the front of the printer when its cover is opened.

② As shown in the illustration to the right, place the mounting bracket against the wall where the printer is to be mounted and mark the positions of the screw holes.

③ Drill holes at the locations marked.

④ Secure the bracket in place using screws with a diameter of 4 mm.

Note : Screws are not included in the package. Prepare the screws that can be used on the type of wall for mounting.

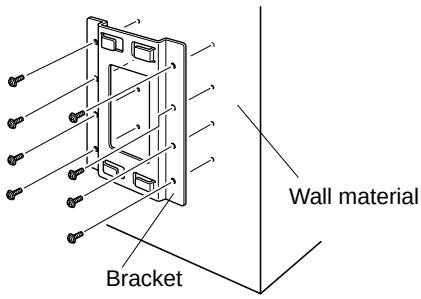

fig.1 Attaching the bracket

Wood structure wall	Concrete structure wall
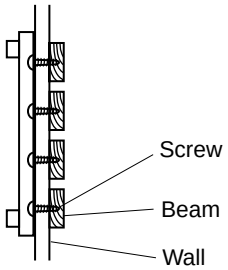 • Locate the beams in the wall and mount using them. • Do not tighten the screws or anchors to locations with one wall sheet. Always make sure that the screws penetrate the beams. (This is so the weight of the printer can be supported.)	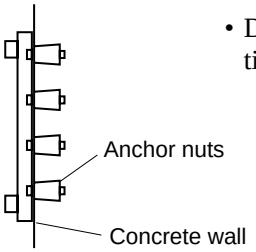 • Drive the anchor nuts into the wall and tighten the screws.

2-3. Changing the position of the near end sensor

① Push the cover open lever, and open the printer cover.

② Press the sensor hole with the tip of a pen or any other pointed-tip object and slide the Near End Sensor to the Level 2 position shown in the figure. Check that the protrusion is securely fit into the groove.

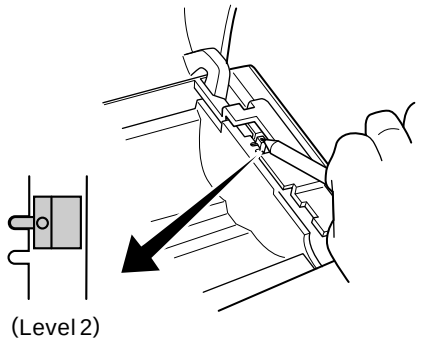

fig.2 Changing the position of the near end sensor

2-4. Attaching the paper guide B

Attach the paper guide B to the printer. Then tighten the two M3 screws that were supplied to secure it in place.

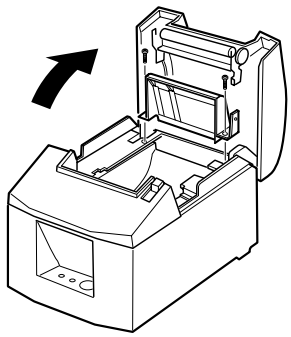

fig.3 Attaching the paper guide B

2-5. Attaching the holder plate

Attach the holding plate to the printer. Then tighten the four M3 screws that were supplied to secure it in place.

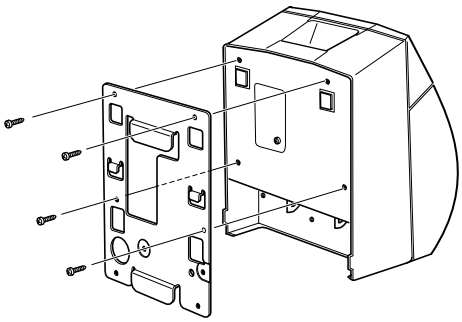

fig.4 Attaching the holder plate

2-6. Setting the printer onto the bracket

Position the printer over the wall bracket and then slide it downward to set it in place.

The printer is fixed in place by interlocking the hook on the plate attached to the bottom of the printer with the hook connector on the bracket. It is not necessary to secure it further with screws.

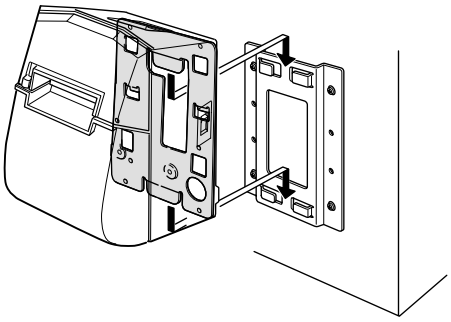

fig.5 Setting the printer onto the bracket

2-7. Setting the roll paper

① Push the cover open lever, and open the printer cover.

② Insert the roll paper as shown.

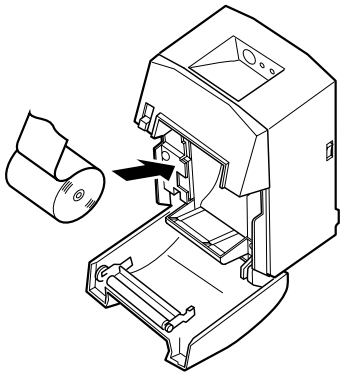

fig.6 Setting the roll paper